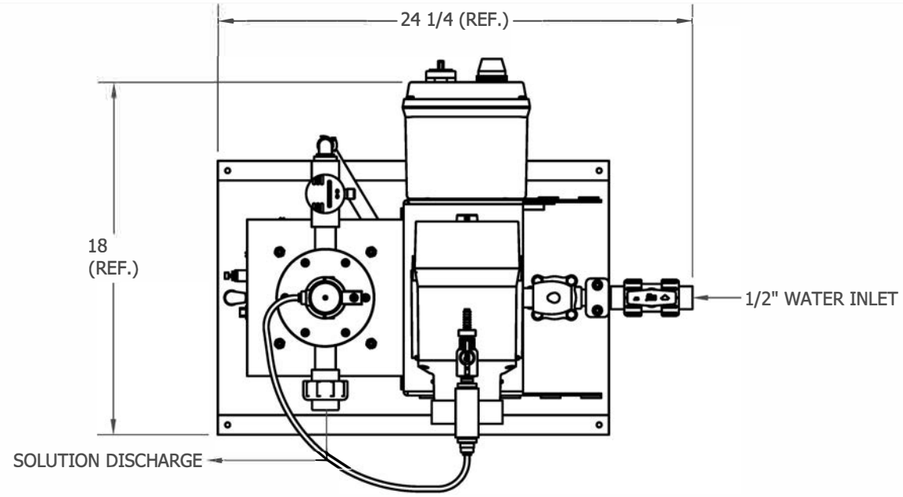

TOP VIEW

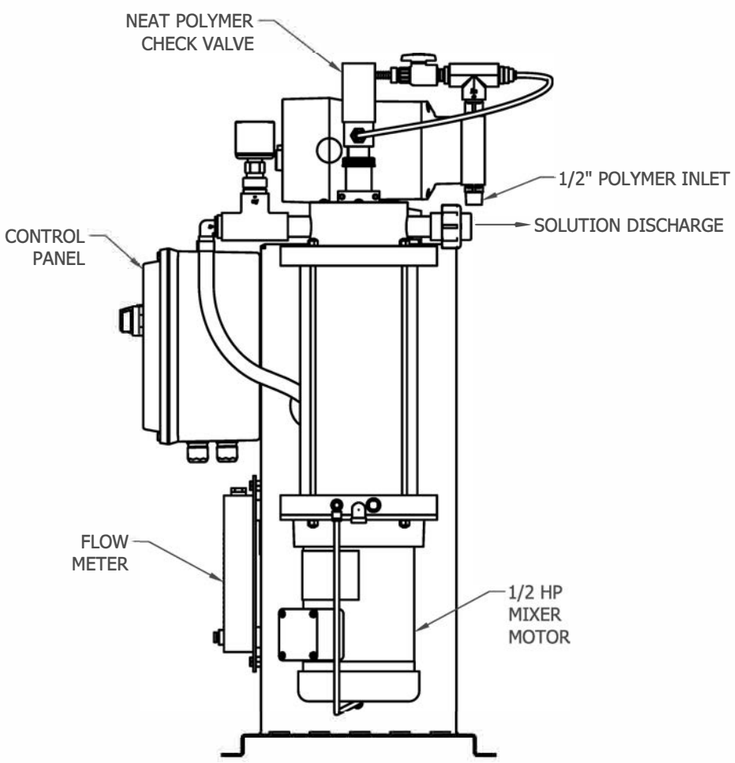

FRONT VIEW

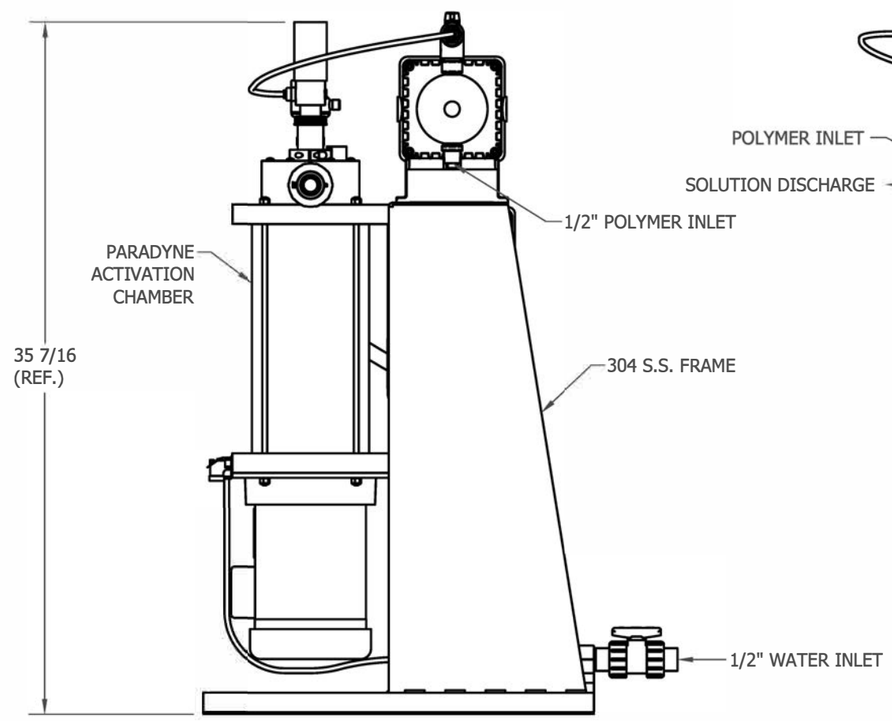

RIGHT SIDE VIEW

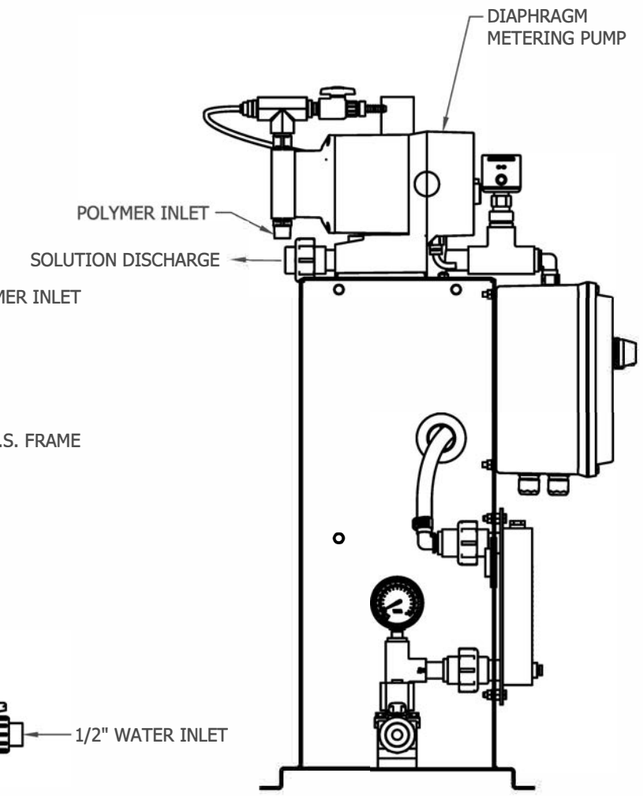

REAR VIEW

** NOTICE **

THIS DRAWING AND THE INFORMATION HEREIN CONTAINED ARE THE PROPERTY OF ECOLOGIX SYSTEMS, WHICH HAS FURNISHED THEM IN CONFIDENCE UPON THE UNDERSTANDING AND CONDITION THAT ALL PERSONS, FIRMS OR CORPORATIONS RECEIVING SUCH DRAWING AND INFORMATION SHALL BY THE ACT OF RECEIVING THEM BE DEEMED TO HAVE AGREED: TO MAKE NO COPY, DUPLICATION, DISCLOSURE OR USE WHATSOEVER OF ALL OR ANY PART THEREOF EXCEPT AS EXPRESSLY AUTHORIZED IN WRITING BY ECOLOGIX SYSTEMS: NOT TO GIVE, LEND OR OTHERWISE DISPOSE OF THIS DRAWING AND TO RETURN THIS DRAWING PROMPTLY UPON REQUEST.

NO.	DESCRIPTION	DATE	BY	CKD
A	SALES CONCEPT DRAWING	7/22/16	MJE	

ECOLOGIX™
ENVIRONMENTAL SYSTEMS

DATE	DRAWN BY	SCALE	DRAWING NUMBER	REV
7/22/16	MJE	NTS	POLYMER-1	A